MIT OpenCourseWare
http://ocw.mit.edu

2.830J / 6.780J / ESD.63J Control of Manufacturing Processes (SMA 6303)
Spring 2008

For information about citing these materials or our Terms of Use, visit: http://ocw.mit.edu/terms.

MIT 2.830J/6.780J Assignment 1 (2008) — Solutions

Problem 1 — exemplary solution provided courtesy of Eehern Wong.

Choose Cantilever-beam MEMS accelerometer

a) Outputs:

Output geometry - Width, length, thickness, sidewall angles

Output constitutive properties - Young's modulus, density, resonant frequency (function of stiffness and mass, which are functions of above geometry and constitutive properties)

b) Fabrication:

Photolithography – Use a chrome mask, pattern wafer with photoresist by applying UV light to harden resist. Use resist mask to pattern oxide mask. Use oxide mask to wet etch silicon (next step). Lithographic processes determine the top planer dimension of the part (width, length).

Wet chemical etching – Etch with KOH for anisotropic etch of silicon. Determine endpoint when cantilever released, overetching is okay since anisotropic. The wet etch contributes primarily to the z-direction geometry of the part since sidewall angles are determined by the etchant used (KOH is anisotropic) and the crystallographic orientation of the silicon substrate.

Young's modulus and density are functions of the bulk silicon, and are process independent. However, since stiffness and density are also functions of volume, and therefore geometry, they are affected by both lithography resolution and etch time/chemical.

c) Process parameters:

Photolithography

- Equipment state - UV on/off, power density of tool, time of exposure
- Equipment properties - UV power density dependence on temperature/time
- Material states - Prepolymer, exposed polymer, developed/cured polymer
- Material properties - Viscosity, catalytic density

Wet chemical etching

- Equipment state - Concentration, temperature, time of KOH
- Equipment properties - KOH etch rate as a function of conc, temp, time
- Material states - Bulk silicon, silicon and KOH product
- Material properties - Crystallographic orientation, silicon type, mask material

d) Control variables:

Photolithography – Exposure time, softbake time, softbake temperature, develop time, develop spin speed

Wet chemical etching – Chemical etchant, etchant concentration, chemical bath temperature, etch time

e) Output sensitivity to control variables:

Photolithography

Exposure time, softbake time, softbake temperature, develop time, develop spin speed – all affect the width and length of the oxide mask used to etch the cantilever. Alignment of the cantilever to crystallographic orientations, also affect width and length because of etch plane selectivity.

Wet chemical etching

Chemical etchant, etchant concentration, chemical bath temperature, etch time – all vary cantilever thickness, and to a smaller degree cantilever width (assuming KOH etch)

f) Process control:

Photolithography

Mechanical kinematic coupling with wafer flat to ensure that mask is aligned with desired crystallographic orientation, check process history for best "recipe" for exposure time, bake time/temp, and develop time/speed.

Wet chemical etching

Check process history for best "recipe" for low sensitivity to etch time by controlling acid concentration. Acid concentration and temperature can be well controlled by measuring pH and placing in a heated bath.

g) Block diagram:

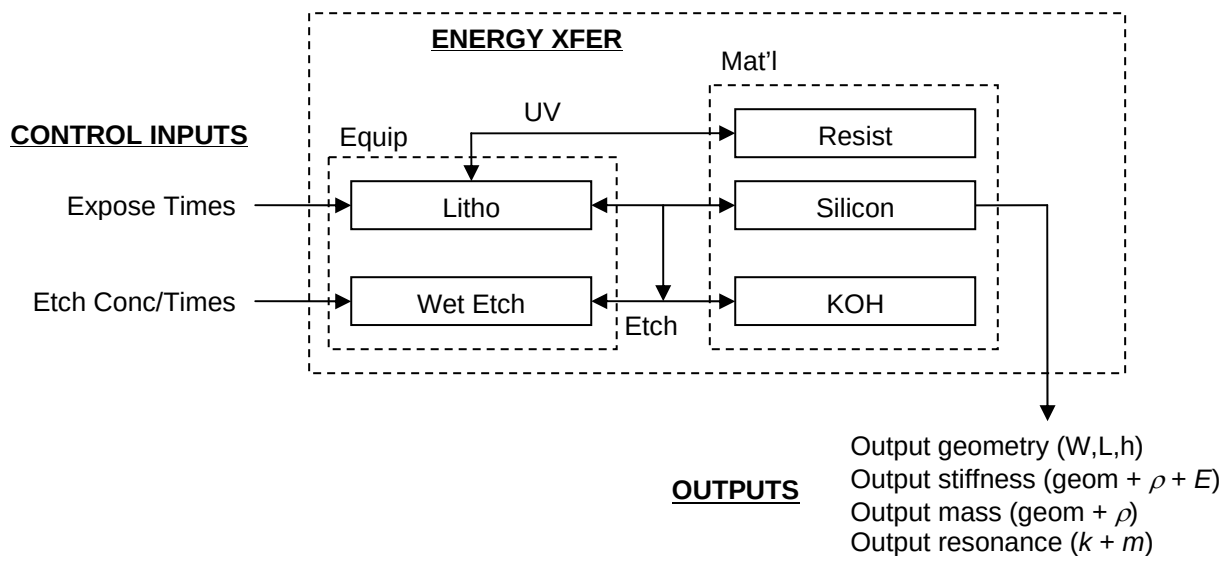

Problem 2 — exemplary solution provided courtesy of Eehern Wong.

a) Dominant Energy:

Photolithography

UV exposure power density and time

Wet chemical etching

Etch concentration and time

b) Area/volume:

Photolithography

Area: W*L (in reality, depends on positive or negative resist, and acts on the entire wafer, so πr^2)

Wet chemical etching

Exposed surface area over time (total is volume of material removed)

c) Process Taxonomy:

Photolithography

Transformation Mode: Formation
Serial/Parallel: Parallel (entire wafer, all dies)
Energy Domain: Electrical (UV) and Chemical (crosslinking)

Wet chemical etching

Transformation Mode: Removal
Serial/Parallel: Parallel (entire wafer etched, although somewhat serial if you consider that we are etching through the material)
Energy Domain: Chemical (etching)

Problem 3

Potassium hydroxide (KOH) in aqueous solution is a typical etchant for silicon. In this question we will consider the sensitivity of the etched depth to variations of etch time, KOH concentration and temperature.

a) Determine the sensitivity of etched depth to

i. etch time;
ii. KOH concentration;
iii. solution temperature

for the following two sets of nominal parameters:

1. etch time = 5 minutes; KOH concentration = 40 wt%; solution temperature = 72 °C;

   From Fig 1, etch rate is 42 μm/h under these conditions.

   i. Sensitivity of etched depth to time = **42 μm/h**;
   ii. Sensitivity to concentration: draw tangent to rate–concentration curve at 40 wt%, giving a sensitivity of (–25 μm/h)/(20 wt%) * (5/60)h = **–0.10 μm/wt%;**
   iii. Etch rate $R = R_0\exp(-E_a/kT)$; $\partial R/\partial T = (R_0E_a/kT^2)\exp(-E_a/kT) = RE_a/kT^2$. Thus sensitivity of depth to temperature is 42 μm/h * (0.6 * 1.60 × 10^{-19} J) * (5/60) h / (1.38 × 10^{-23} J/K * $(72+273)^2$ K^2) = **0.21 μm/K**.

2. etch time = 1 hour; KOH concentration = 20 wt%; solution temperature = 40 °C.

   Etch rate at 20 wt% and 72 °C is 55 μm/h (from Fig. 1). Use Arrhenius Law to convert this to an etch rate at 40 °C:

   $R(40\ °C) = R(72\ °C) * \exp\{[1/(72+273) - 1/(40+273)] * (0.6 * 1.60 \times 10^{-19}\ J)/(1.38 \times 10^{-23}\ J/K)\} = 7.0\ \mu m/h.$

   i. Sensitivity of etched depth to time = **7.0 μm/h;**
   ii. Sensitivity to concentration: 20 wt% is at the peak of the rate–concentration curve, so sensitivity to concentration is approximately **zero** here.
   iii. Sensitivity of depth to temperature is 7.0 μm/h * (0.6 * 1.60 × 10^{-19} J) * 1 h / (1.38 × 10^{-23} J/K * $(40+273)^2$ K^2) = **0.50 μm/K**.

To answer this question you can use the information in Figure 1, which is taken from Seidel *et al*., *J. Electrochemical Society*, vol. 137, no. 11, pp. 3612–3626, 1990. You may also assume that the etch rate, R, follows the Arrhenius relation: $R = R_0\exp(-E_a/kT)$ with an activation energy E_a of 0.6 eV, independent of temperature and KOH concentration. R_0 may be derived from Figure 1, and may be assumed to be a function of KOH concentration but independent of temperature. T is the temperature in Kelvin, k is Boltzmann's constant (1.38 × 10^{-23} J/K), and there are 1.60 × 10^{-19} J in 1 eV.

b) Provide reasoned estimates of how well it is possible to control:

i. etch time (hint: the silicon wafer to be etched is usually immersed in a bath of the KOH solution during etching);

   Suggest that removal from solution can be timed to ±10s; wafer would have to be rinsed in DI water to stop the etch. Many reasonable suggestions were made and justified, varying from ~1 s to ~1 min.

ii. KOH concentration (hint: the KOH solution is prepared either by diluting concentrated solution or by dissolving KOH pellets in water);

Say 1 L is mixed; the mass of KOH could be measured with electronic scales to ±1 g, giving a variability of ±0.1 wt% in the concentration. Factors such as water evaporation during etching and progressive consumption of reactant might also be usefully mentioned.

iii. solution temperature (hint: the KOH solution is usually contained in a temperature-controlled water bath).

It seems reasonable to be able to control the temperature to within ±2 °C of the target – thorough answers might consider the resolution of thermometers, the thermal capacity of a water bath, or make some remark about the specifications of typical laboratory water baths.

c) Using your answers to (a) and (b), deduce which of the three machine states (temperature, time, concentration) contributes the largest portion of the variability of the etched depth in each of the two cases evaluated.

Parameter	Likely input variability	Case 1, sensitivity	Case 1, resulting depth variability	Case 2, sensitivity	Case 2, resulting depth variability
Etch time	± 10 s	42 µm/h	± 0.12 µm	7.0 µm/h	± 0.02 µm
KOH concentration	± 0.1 wt%	–0.10 µm/wt%;	± 0.01 µm	~ 0	~ 0
temperature	± 2 °C	0.21 µm/K	± 0.42 µm	0.50 µm/K	± 1.0 µm

Under these assumptions, temperature variability contributes the largest proportion of etched-depth variability. Other legitimate assumptions might give quite a different result, however.

d) If you needed to etch to a depth of 100 µm, what is the smallest depth variability that could be achieved using a timed KOH etch? (Hint: focus on the sensitivity of etched depth to temperature. Express the sensitivity of etched depth to temperature in terms of the target depth, temperature and physical constants. Then decide what temperature to use and compute the likely resulting variability. Think about physical constraints on your selection of parameters. Finally, check the depth variability due to time and concentration variations.)

Given a target depth and the requirement to choose a temperature, etch time and KOH concentration, there are two degrees of freedom (once a temperature and KOH concentration are chosen, for example, the etch rate is set, so the required etch time is determined).

Select operating temperature:

From above: $\partial R/\partial T = (R_0 E_a/kT^2)\exp(-E_a/kT) = RE_a/kT^2$

But sensitivity of final etched depth = $\partial R/\partial T$ * (etch time)

and (etch time) = (target etch depth)/R

so sensitivity of final etched depth = dE_a/kT^2 where d is the target etch depth. We see that for a fixed depth, variability decreases with temperature, so make the temperature as high as possible. We might expect the aqueous solution to boil if we go above 100 °C (in fact research [Tanaka *et al*., Proc. IEEE Transducers 2003, Boston] has shown that the boiling point increases with KOH concentration –to about 135 °C at ~ 40 wt%); perhaps limit the temperature to 85 °C to avoid excessive evaporation during the etch, which will need to last about an hour.

For a target depth of 100 µm the temperature-related variability is therefore

$(100\ \mu m) * (0.6 * 1.60 \times 10^{-19}\ J) / (1.38 \times 10^{-23}\ J/K * (85+273)^2\ K^2) * 2\ K = 11\ \mu m.$

So timed KOH etches have a variability of ~ 10% under the assumptions made here. These calculations are however for blanket etches; KOH etches are usually used with a mask that interacts with the silicon crystal structure to cause the etch to terminate in a position with a precision on the order of that with which the mask is fabricated. If precise blanket etches are needed, etch stops (*e.g*. electrochemical) are possible.

Check other parameters:

Etch rate at 85 °C, 20 wt% KOH gives 87 μm/h. So the time to etch 100 μm is 1.1 h. Depth variability due to etch time variability = 87 μm/h * (10/3600)h = 0.24 μm. Much smaller than the variability due to temperature.

We chose 20 wt% KOH, where $\partial R/\partial C \sim 0$.

Note:

The optimal choice of temperature and KOH concentration depends on the assumptions you made in part (b) about variability of etch time, KOH concentration and temperature. The Excel spreadsheet embedded below can be used to find an optimal operating point. In the spreadsheet I have modeled the dependence of etch rate on KOH concentration as a quadratic function, with a maximum at 20% – this seems to resemble the published data rather well. You enter your assumptions about input variabilities in the light green cells, and the spreadsheet is set up to use the Solver plug-in to find the appropriate temperature and concentration for a minimal variability of etched depth.

Broadly, as your assumption about concentration variability gets more optimistic and/or your assumption about etch time variability becomes more pessimistic, the optimal KOH concentration can start to increase from 20% (20% concentration gives zero sensitivity to concentration, but a maximal etch rate for a given temperature – and that fast etch-rate can prove problematic if etch time is relatively poorly controlled).

Double-click on the chart below to enter Excel and run the optimization:

2.830/6.780 PS1 Q3: go to Tools > Solver to run

Legend:
value optimized by Excel
value calculated by Excel
user input

Parameter:	**Time (h)**	**Temperature (Centigrade)**	**KOH concentration (wt%)**
Nominal value	1.52E+00	91.74048714	56.27995748
Input variability	0.016666667	2	1
Partial sensitivity of etched depth (micron/{h,K,wt%})	65.79990444	5.22906691	-8.210320706
Components of depth variability (micron)	1.096665074	10.45813382	-8.210320706

R_0 (micron/h)	1.26E+10
Target depth (micron)	100
Etch rate (micron/h)	6.58E+01
Output variability (micron)	19.7651196

Constants:	
k (J/K)	1.38E-23
E _a (J)	9.6E-20
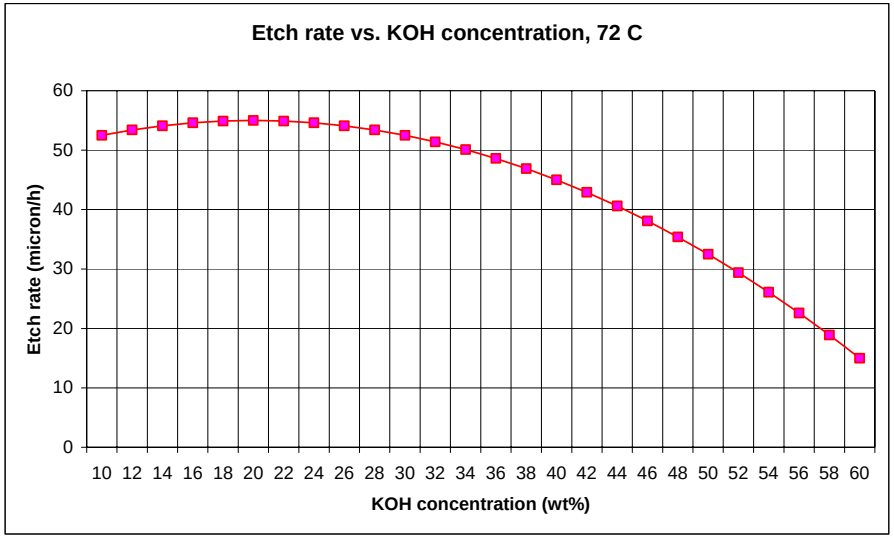
KOH concentration	Rate (micron/h at 72 C)
10	52.5
12	53.4
14	54.1
16	54.6
18	54.9
20	55
22	54.9
24	54.6
26	54.1
28	53.4
30	52.5
32	51.4
34	50.1
36	48.6
38	46.9
40	45
42	42.9
44	40.6
46	38.1
48	35.4
50	32.5
52	29.4
54	26.1
56	22.6
58	18.9
60	15